SOUNDSPHERE®

LOUDSPEAKERS

SOUNDSPHERE®

LOUDSPEAKERS

... In Churches

A single Model Q-8 Soundsphere® loudspeaker 22' (6.7m) above the floor in a church with a reverberation time of 2 seconds at 1 kHz.

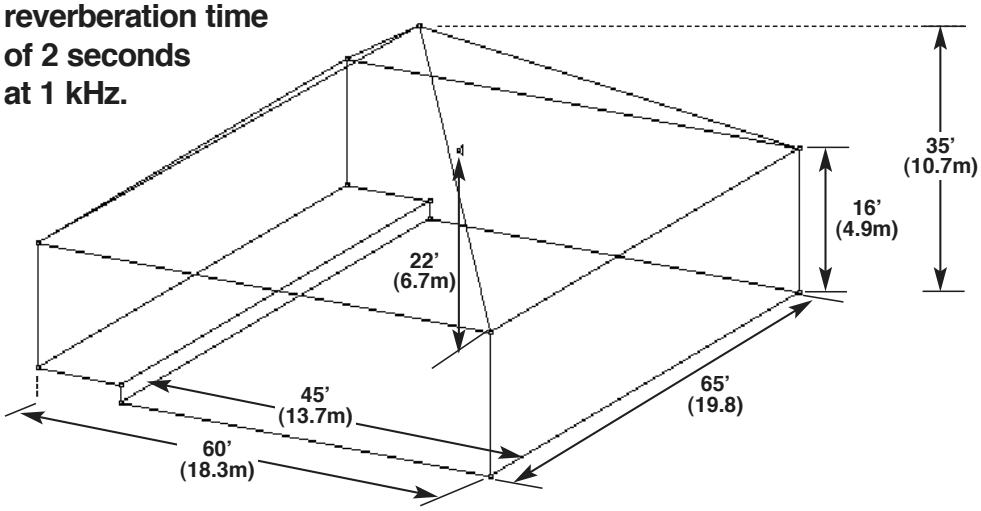

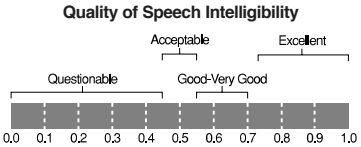

Decibels

- 120 - jet takeoff 200' away
- 110 - loud rock music
- 100 - heavy truck close by
- 5,000 shouting people in an arena
- 90 - boiler room
- 80 - heavy traffic
- 70 - vacuum cleaner 10' away
- normal conversation
- 60 - large store

Typical Sound Pressure Levels (A-weighted)

RASTI

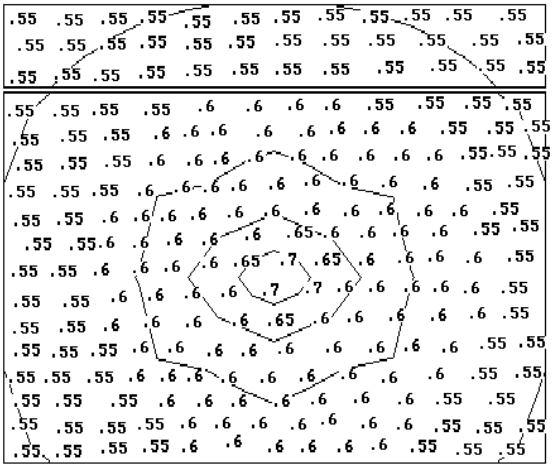

Total SPL with 50 watts

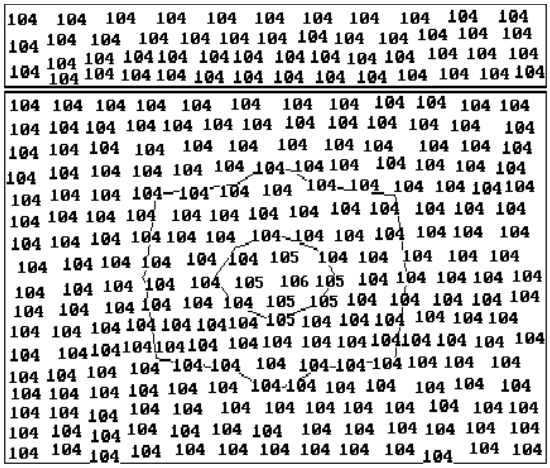

Picture:
St. Matthew's
Methodist Church,
Acton, MA.

- **Soundsphere® loudspeakers fill the listening area with smooth, diffuse sound.**
- **The non-directional characteristic of Soundsphere® speakers prevents listeners from aurally locating the sound source.**
- **The uncommon aesthetics of Soundsphere® speakers prevent listeners from visually locating the sound source.**
- **In many cases, listeners will not even perceive a sound reinforcement system.**
- **The light weight of Soundsphere® speakers makes on-site demonstration and installation fast and easy.**
- **A single Soundsphere® speaker can cover a large area. Often, one Soundsphere® is enough for many churches.**

Intelligible Voice, Inspiring Music

Set up a demonstration and hear the difference.

SOUNDSPHERE®
Division of Sonic Systems, Inc.
10 Research Drive • Stratford, CT 06615 • Phone: (203) 386-9200 • Fax: (203) 386-0773 • E-mail: soundsp@attglobal.net • www.soundsphere.com